OPERATION MANUAL
1"x30" Belt / 5" Disc Sander

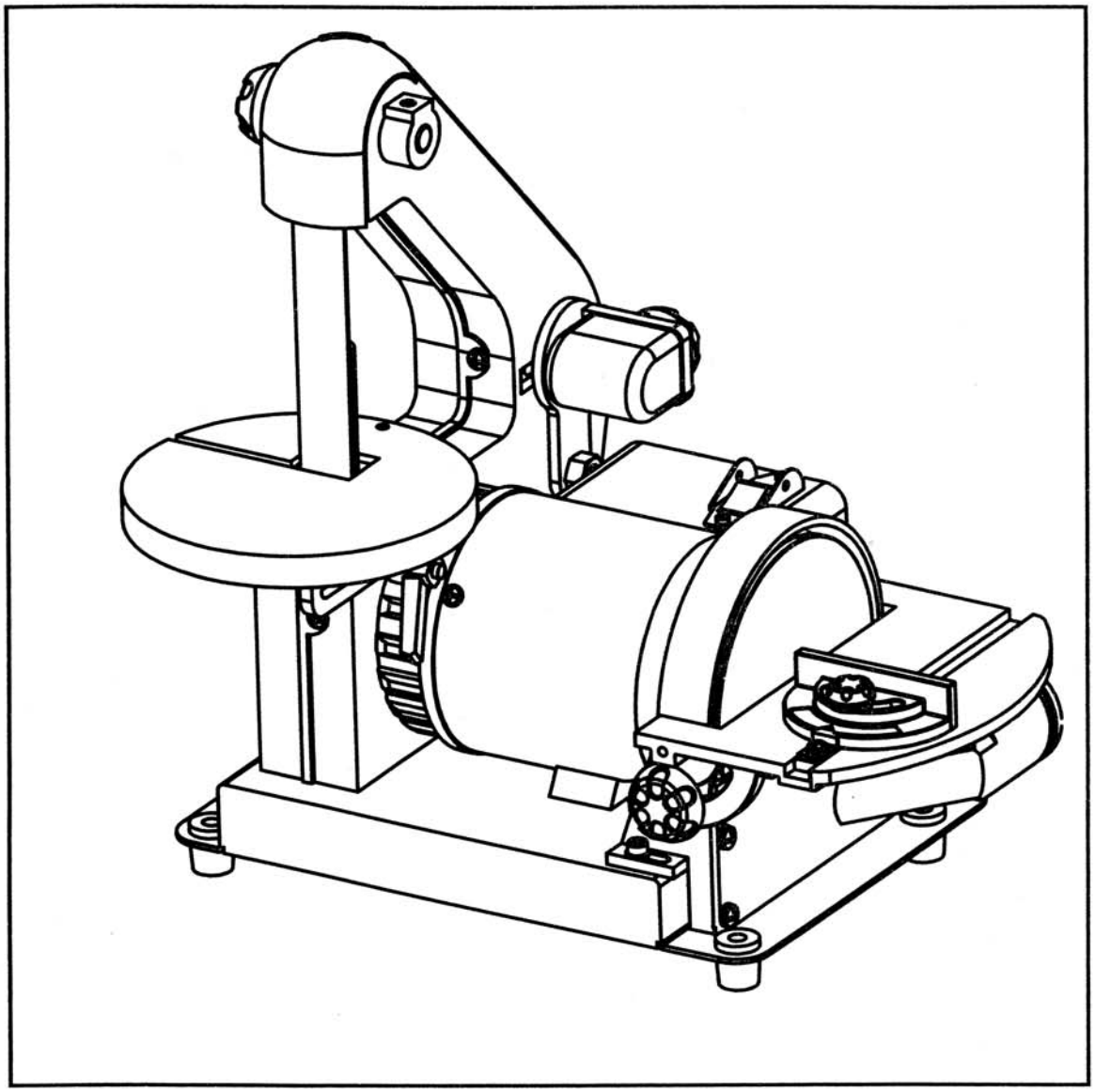

Owner's Manual

Attention: No advice will be made for any changes of structure

Importmant: Before operating, the tool user must read and understand this manual

Table of Contents

Specifications

Model #	MM493A
Serial #:	
Motor Type:	Induction
Motor Ratings:	120 V AC, 2.3 A, 60 Hz, 1/3 HP
Motor Speed:	3400 RPM (no load)
Disc Diameter:	5" (125 cm)
Disc Specifications:	A80 psa type (Pressure Sensitive Adhesive)
Belt Speed:	3340 SFM (no load)
Belt Size:	1 x 30" (2.5 x 76 cm)
Belt Grit:	A100
Net Weight:	**15 lb 6 oz (7 kg)**

Important Safety Rules

DANGER!! Failure to observe any of the following instructions could result in severe personal injury to tool user and bystanders or cause damage to tool and property!

WARNING! – Read, understand and observe all instructions in this manual before using or operating the tool for which it is written and supplied. Ensure that anyone who is to use the tool has read and understood the instructions provided.

- **Always** wear eye protection that complies with a recognized standard (CSA or ANSI).
- Wear a mask or respirator when dust is generated.
- Some dust created by power sanding contains chemicals that may cause cancer, birth defects or other harm. Some examples of these chemicals are: lead from lead-based paint, and arsenic and chromium from chemically treated lumber. To reduce exposure to these chemicals, work in a well-ventilated area; use approved safety equipment; and use dust masks that are specially designed to filter out microscopic particles.
- Keep bystanders out of the work area while operating the tool.
- **WARNING! Always ensure that the work area is clear of any flammable materials, liquids or gasses, because the use of this tool may create sparks.**
- Keep guards in place and working properly.
- Keep hands clear of sanding areas.
- Ensure sanding belt runs in the proper direction. Sanding belt must travel down at the front of the machine.
- Ensure sanding belt is tracking properly so that it does not come off the pulleys.
- Unplug from power supply before adjusting or servicing.
- To avoid electric shock, **DO NOT** use in damp conditions or expose to rain.
- Use only accessories that are recommended by the manufacturer for your model.
- Grounded tools must be plugged into an outlet that has been properly installed and grounded in accordance with all local codes and ordinances. Never remove the grounding prong from the plug or modify it in any way. Do not use adaptor plugs. If in doubt as to whether the outlet is properly grounded, consult a qualified electrician.
- Do not use the tool when tired or under the influence of drugs, alcohol or medication.
- Do not wear loose clothing or jewellery. Keep hair tied back.
- Ensure the power switch is off prior to plugging in the tool.
- Ensure sanding belt or disc is not torn or loose.
- Hold workpiece firmly while sanding.
- Firmly support workpiece with mitre gage, backstop, jig or worktable when sanding with the belt.
- AVOID kickback by sanding in accordance with directional arrows. **Sand on downward side of disc only!**
- **DO NOT** attempt to hold pieces of material that are too small to be safely supported by hand. Utilize special jigs or hand tools.
- **Remove** scrap pieces and other loose objects from the belt and disc tables before turning the machine on.
- When sanding metal, move the metal across the belt or disc and cool it when it becomes hot.
- **WARNING! Do not operate your belt/disc sander until it is completely assembled and installed according to the instructions.**

- Service on these tools should only be performed by an authorized, qualified technician.
- **SAVE THESE INSTRUCTIONS.**

Know Your Belt/Disc Sander

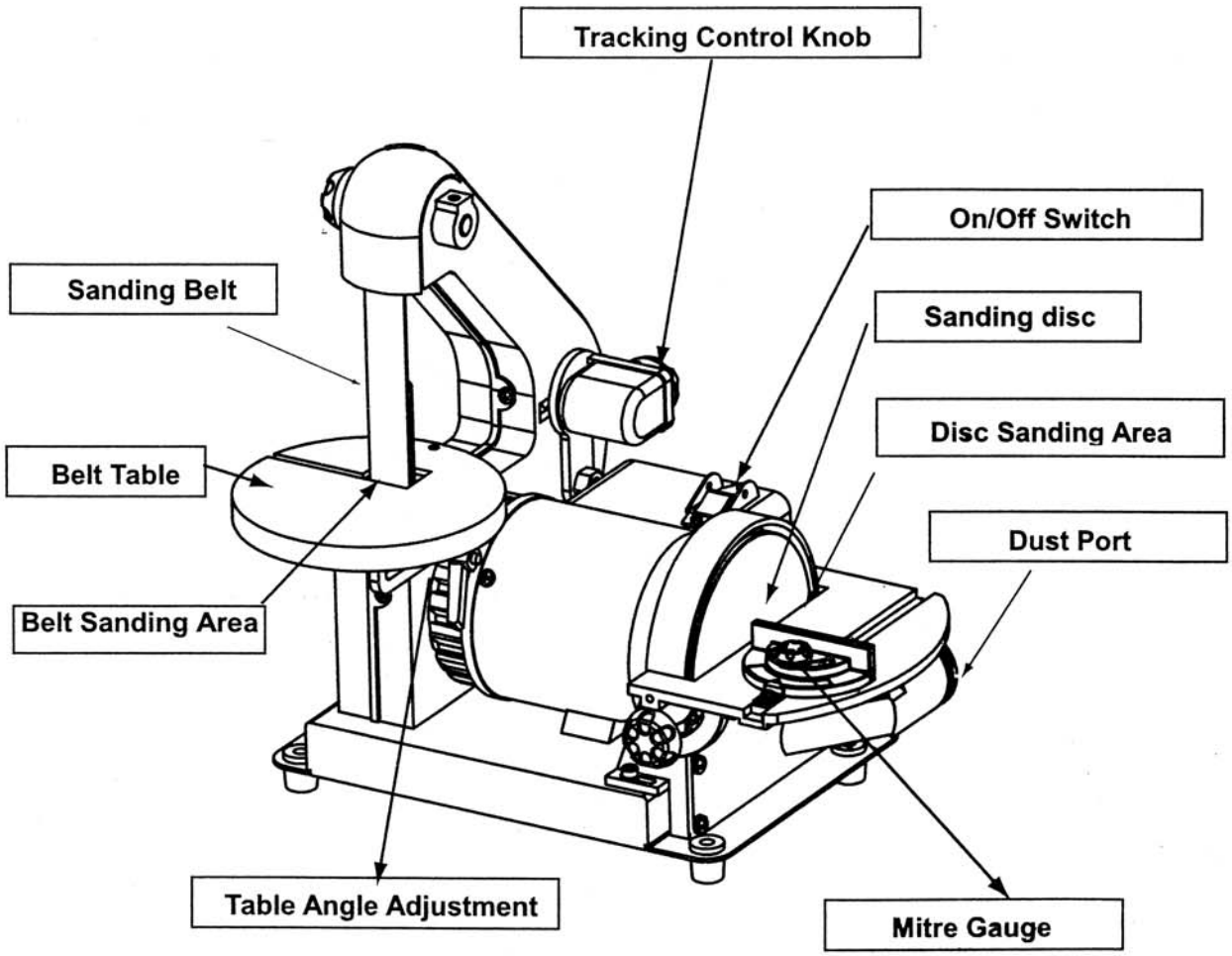

Operating Instructions

Before You Start – Electrical

In the event of a malfunction or short circuit, grounding provides the path of least resistance for electrical current, and reduces the risk of electric shock for the operator. This tool is equipped with an electric cord that has an equipment grounding conductor and a grounding plug. The plug MUST be plugged into a matching outlet that is properly installed and grounded in accordance with ALL local codes and ordinances.

DO NOT MODIFY THE PLUG PROVIDED. If it will not fit the outlet, have the proper outlet installed by an electrician.

Figure 2

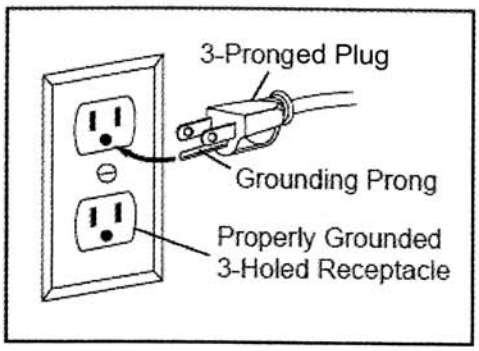

IMPROPER CONNECTION of the equipment grounding conductor can result in increased risk of electric shock. The conductor with the green insulation (with or without yellow stripes) is the equipment grounding conductor. If repair or replacement of the electric cord or plug is necessary, DO NOT connect the equipment grounding conductor to a live terminal.

CHECK with a qualified electrician or service personnel if you do not completely understand the grounding instructions, or if you are not sure if the tool is properly grounded.

This tool is intended for use on a circuit that has an outlet that looks like the one illustrated. The original tool has a grounding plug that looks like the plug illustrated. (Figure 2)

Use of Extension Cords

USE ONLY THREE-WIRED EXTENSION CORDS that have 3-prong plugs and 3-holed outlets that accept the tool's plug. Repair or replace damaged or worn cords immediately.

Be sure your extension cord is properly wired and in good condition. Do not use damaged extension cords. Always replace a damaged extension cord.

When using an extension cord, be sure to use one heavy enough to carry the current your product will draw. An undersized cord will cause a drop in line voltage, resulting in loss of power and overheating. The table below shows the correct size to use according to the cord length and the amperage draw of the tool (specified on the nameplate). When in doubt, use the next heavier gauge. The smaller the gauge number, the heavier the cord. (AWG = American Wire Gauge).

Minimum Gauge for Extension Cords (AWG)
(when using 120 volts only)

Ampere Rating		Total Length of Cord in Feet (meters)			
More Than	**Not more Than**	**25' (7.6m)**	**50' (15m)**	**100' (30.4m)**	**150' (45.7m)**
0	6	18	16	16	14
6	10	18	16	14	12
10	12	16	16	14	12
12	16	14	12	**Not Recommended**	

Use a separate electrical circuit for your tools. This circuit should not be less than a #12 gauge wire, and should be protected with a 15 A time-lag fuse or breaker. Before connecting the motor to the power line, ensure the switch is in the OFF position and the electric current is rated the same as the current stamped on the motor's nameplate. Running at a lower voltage will damage the motor, and this damage is not covered by warranty.

Before You Start – Assembly and Installation

WARNING! Always ensure the sander is unplugged prior to attempting any assembly, installation or changing of parts and accessories.

Mounting the Sander to the Workbench

CAUTION: If during operation there is any tendency for the sander to tip over, slide or walk on the supporting surface, the sander should be properly mounted to a workbench or stand.

1. Rubber feet were not fastened to this sander prior to shipping. Do not install rubber feet when attaching sander to a bench or stand.
2. Position the sander on the workbench.
3. Mark the workbench through the four mounting holes located in the sander base (holes for rubber feet).
4. Drill holes in the workbench at the marks.
5. Using long bolts, washers, lock-washers and nuts, as shown (not supplied), secure the sander to the workbench.

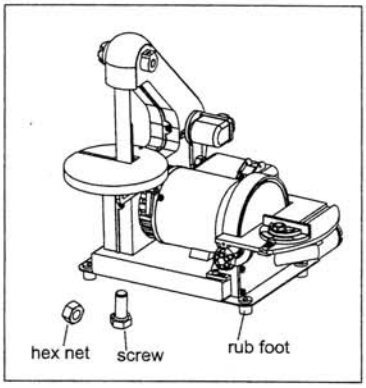

Dust Chute Installation – Disc Sander

1. Fasten the sanding disc dust-chute to the machine using the four Phillips M5 long screws

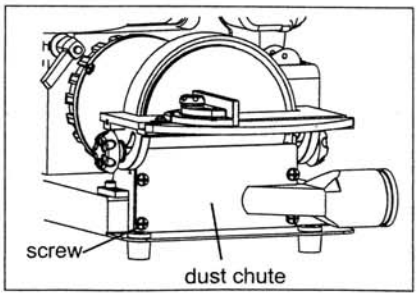

Assembling the Belt Sander Table

WARNING! When assembling the belt & disc sander, ensure the machine is disconnected from any power source.

1. Locate the belt-sanding table (Part # 41 on Parts Schematic)
2. Position the table by threading the belt and plate through opening in table.
3. Fasten the table by using the table-adjustment knob .
4. Bring the adjustment knob screw through the opening on the underside of the table, then through the mounting bracket into the nut.
5. Fasten by using the adjustment handle to turn the integral screw into the nut.

Assembling the Sanding Disc Table and Mitre Gauge

Ensure sander is disconnected from the power supply prior to commencing work.

1. Position the disc-sanding table by tipping it up and threading the small nipples on the back side of the 'angle-gauge' onto the mounting area of the disc-sander.
2. Align the screw holes so that the screw will travel through the angle-gauge openings on either side of the disc into the mounting holes on the disc sander.
3. Using the disc-table adjustment handles, fasten the table to the sander.
4. When required, install the mitre-gauge into the slot on the disc-sanding table.

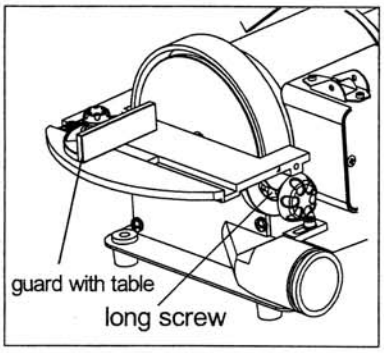

Belt-Table Adjustments

Ensure sander is disconnected from the power supply prior to commencing work.

For most sanding operations, the table will likely remain at a 90° angle to the belt. A positive stop is provided with your sander to ensure fast positioning of the table at 90 degrees to the belt. To ensure and check the positive-stop 90° angle, proceed as follows:

1. Loosen the table-locking lever.
2. Tilt the table to the rear as far as possible.
3. Using a square, protractor or other tool shown verify or adjust the table angle to ensure a 90° angle.
4. To set the sanding angle to a different angle, tilt table to the front until it is at the required angle.
5. Tighten the table-locking lever.

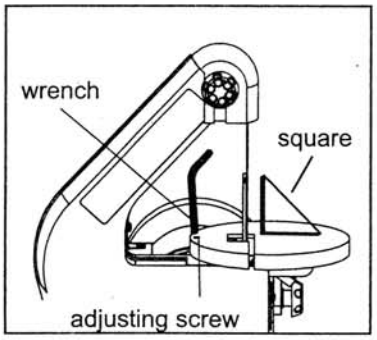

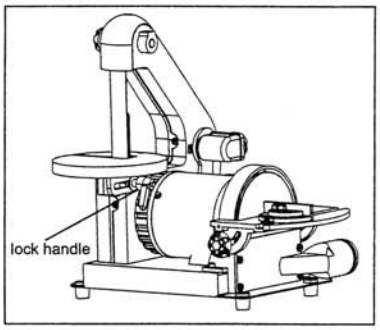

Disc Table Adjustments

Ensure sander is disconnected from the power supply prior to commencing work.

1. To check the trueness of the 90° angle of the disc-sanding table, place a square or other measuring device on the table with the other end against the sanding disc.
2. Loosen disc-table adjustment handles, and adjust table angle to 90°.
3. Retighten disc-table adjustment handles.
4. To adjust disc table to another angle, loosen disc-table adjustment handles;
5. Set table at desired angle.
6. Retighten disc-table adjustment handles.

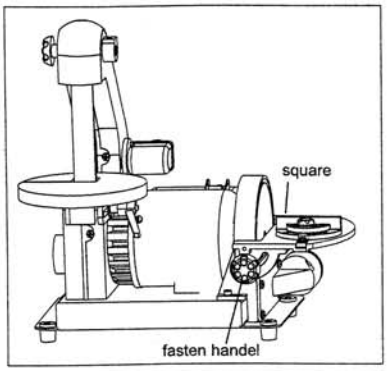

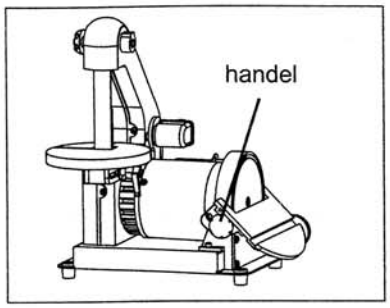

Installing or Changing Accessories – Sanding Discs

WARNING! Turn the power off and remove the plug from the outlet before changing the accessories.

Note: Hook & Loop sanding discs cannot be used with this type of sander!

Removal:

1. Remove and set aside mitre gauge.
2. Completely remove the disc-table adjustment handles.
3. Tip table up and remove.
4. Sanding discs are adhered to the plate using a "pressure-sensitive adhesive". Remove sanding disc from disc plate.

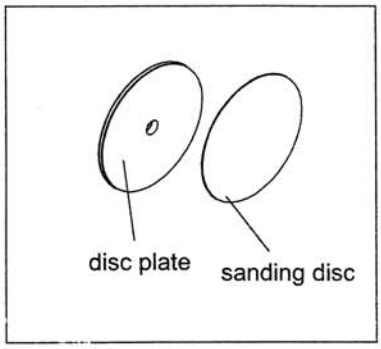

Installation

1. Ensure disc-plate is clean.
2. Peel backing from new sanding disc.
3. Press new sanding disc firmly onto disc-plate.

Note: Hook & Loop sanding discs cannot be used with this type of sander!

4. Replace the sanding table and handles that were removed in step 2 (above).

Installing or Changing Accessories – Sanding Belts

WARNING! Turn the power off and remove the plug from the outlet before changing the accessories.

Removal:

1. Remove lock-knob and two Phillips screws;
2. Remove side cover.
3. Loosen tracking knob to release belt tension.
4. Remove belt from three wheels.

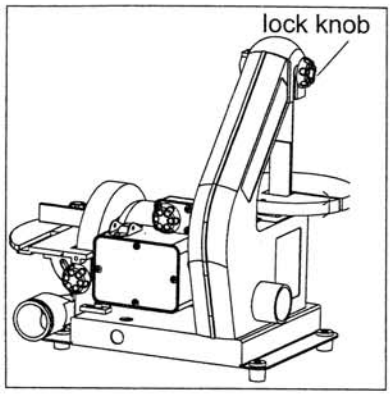

Installation:

5. Install new belt.
6. Replace side cover.
7. Before using, check belt tracking as described in "Belt Tracking" section, and adjust as necessary.

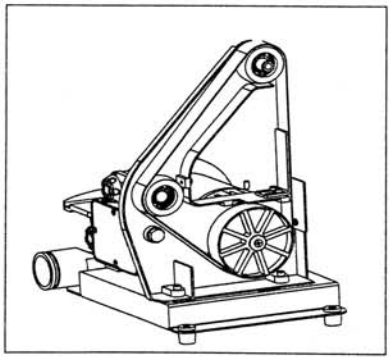

Belt Tracking

The belt-tracking adjustment is set at the factory so that the abrasive belt will run true on the pulleys. If, however, the belt should track to one side or the other, an adjustment can be made by turning the tracking knob, which is located on the back side of the machine. Turning the knob clockwise will

cause the belt to track to the right (towards the disc sander mechanism). Turning the knob counter-clockwise will cause the belt to track to the left side of the machine.

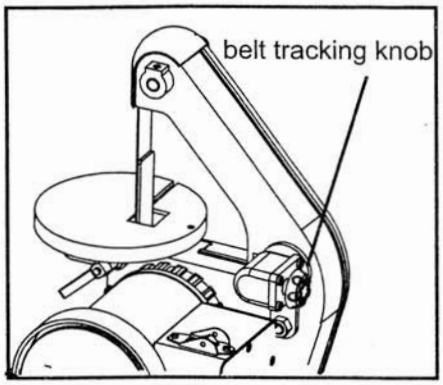

Dust Chutes/Ports – Operation

Sanding operations are inherently dusty. To help minimize the amount of dust that escapes into the surrounding air, this sander is equipped with two dust chutes (aka: ports) that can be easily connected to a dust-collection system with a adapter .There is one dust chute for the belt-sanding system and another for the disc-sanding system. It is strongly recommended that users employ a dust-collection system when using this belt & disc sander.

Use of a mask or respirator is still recommended even when a dust-collection system is in use.

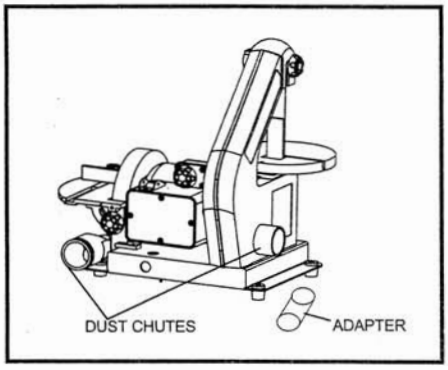

General Usage and Operating Instructions

ON/OFF

The rocker ON/OFF power switch is located on the top of the sander.

1. Press the side marked ON to turn the sander on.
2. Press the side marked OFF to turn the sander off.

Operating Instructions – Belt Sander Platen

The platen is a heavy steel support plate that is positioned behind the sanding belt, rising from the table level to a point several inches above the table level. Its purpose is to support the work when sanding. The platen should be adjusted so that it is almost touching the back of the sanding belt. This can be done by loosening the two hex screws that fasten the bottom of the platen to the sander frame. If the platen is out of alignment for some reason, loosen these two screws, adjust the platen, and retighten the two screws.

To remove the platen for operations such as strapping, polishing or other special operations, remove the two screws that fasten the bottom of the platen to the frame, and remove the platen.

Mitre Gauge – Disc Sander

A mitre gauge is supplied with your sander, and can be used on the disc table, as shown. The mitre gauge head can be set anywhere up to 45° (right or left) by loosening the lock-knob, setting the mitre gauge head to the desired angle and retightening the lock-knob.

Maintenance

WARNING! Turn the power switch "OFF" and disconnect the plug from the outlet prior to adjusting or maintaining the sander. DO NOT attempt to repair or maintain the electrical components of the motor. Take the sander to a qualified service technician for this type of maintenance.

Maintenance Required	Frequency
1. Check power cord	Before each use.
2. Check sanding belts and discs for damage	Before each use.
3. Check moving parts for alignment and binding issues	Before each use.
4. Dress sanding surfaces	As needed
5. Replace sanding belts or discs (see manual section for specifics)	As needed.
6. Clean and vacuum dust from the motor housing and other sander parts	As needed.

Service beyond recommended maintenance on these tools should only be performed by an authorized, qualified technician.

Troubleshooting

Service on these tools should only be performed by an authorized, qualified technician.

SYMPTOM	PROBABLE CAUSE	CORRECTIVE ACTION
Sanding grains easily rub off belt or discs.	1. Sanding belt/disc has been stored in an incorrect environment. 2. Sanding belt/disc has been damaged or folded.	1. Ensure sanding accessories are stored away from extremely hot or dry temperatures. 2. Store sanding accessories flat – not bent or folded.
Deep sanding grooves or scars in workpiece.	1. Sanding belt/disc grit is too coarse for the desired finish. 2. Workpiece sanded across the grain. 3. Too much sanding force on the workpiece. 4. Workpiece held still against the belt-disc for too long.	1. Use a finer-grit sanding accessory. 2. Sand with the grain of the wood. 3. Reduce pressure on workpiece while sanding. 4. Keep workpiece moving while sanding on the sanding accessory.
Sanding surface clogs quickly.	1. Too much pressure against belt/disc. 2. Sanding softwood.	1. Reduce pressure on workpiece while sanding. 2. Use different stock, different sanding accessories, or accept that this will happen and plan on cleaning or replacing belts/ discs frequently.
Burns on workpiece.	1. Using a sanding grit that is too fine. 2. Using too much pressure. 3. Work held still for too long.	1. Use a coarser-grit sanding accessory. 2. Reduce pressure on workpiece while sanding. 3. Do not keep workpiece in one place for too long.
Motor will not start.	4. Low voltage 5. Open circuit in motor or loose connections. 6. Blown fuse or breaker.	4. Check power source for proper voltage. 5. Inspect all lead connections on motor for loose or open connections. **(Send for Servicing.)** 6. Short circuit. **(Send for Servicing.)** 7. Improper match between tool and circuit, fuse or breaker.
Motor will not start – fuses or circuit breakers tripping or blowing.	1. Short circuit in line, cord or plug. 2. Short circuit in motor or loose connections. 3. Incorrect fuses or circuit breakers in power line.	1. Inspect cord or plug for damaged insulation and shorted wires. 2. Inspect all connections on motor for loose or shorted terminals and/or worn insulation. 3. Install correct fuses or circuit breakers or switch tool to an appropriately sized circuit.

Motor overheats.	1. Motor overloaded. 2. Extension cord too long and of insufficient gauge (weight).	1. Reduce load on motor (pressure on object being sanded.) 2. Utilize an extension cord of appropriate gauge and length or plug tool directly into outlet.
Motor stalls (resulting in blown fuses or tripped circuit).	1. Short circuit in motor or loose connections. 2. Low voltage. 3. Incorrect fuses or circuit breakers in power line. 4. Motor overload.	1. Inspect connections on motor for loose or shorted terminals or worn insulation. **(Send for Servicing.)** 2. Correct low voltage conditions (for example: improper extension cord length and/or gauge). 3. Install **CORRECT** fuses or circuit breakers or plug tool into an appropriate circuit, matched to an appropriate fuse or breaker. 4. Reduce the load on the motor.
Machine slows when operating.	1. Feed rate too great. 2. Undersized circuit or use of undersized extension cord.	1. Reduce the rate at which the workpiece is fed into the working area of the tool. 2. Ensure circuit wires or extension cords are proper gauge, or eliminate use of extension cords.
Machine vibrates excessively.	1. Incorrect motor mounting. 2. Incorrect sanding-belt tension. 3. Weak or broken tension spring. 4. Idler roller is too loose. 5. Broken/defective sanding accessories.	1. Have motor mountings inspected by service technician. 2. Adjust tension-adjustment knob. Follow belt tensioning/ tracking instructions in this manual. 3. Have tension spring replaced by service technician. 4. Have service technician adjust idler roller. 5. Replace sanding belt/disc.
Workpiece frequently gets pulled out of operator's hands.	1. Not supporting the workpiece against the stop. 2. Attempting to sand (unaided) a workpiece that is too small.	1. Use the platen (backstop) or mitre gauge to support the workpiece. 2. Use another hand tool or jig to grasp or hold the workpiece.
Workpiece lifts up from the sanding disc/table.	1. Sanding on the "up" side of the wheel.	1. Sand on right side of sanding disc (as operator faces the disc).

Parts Schematic

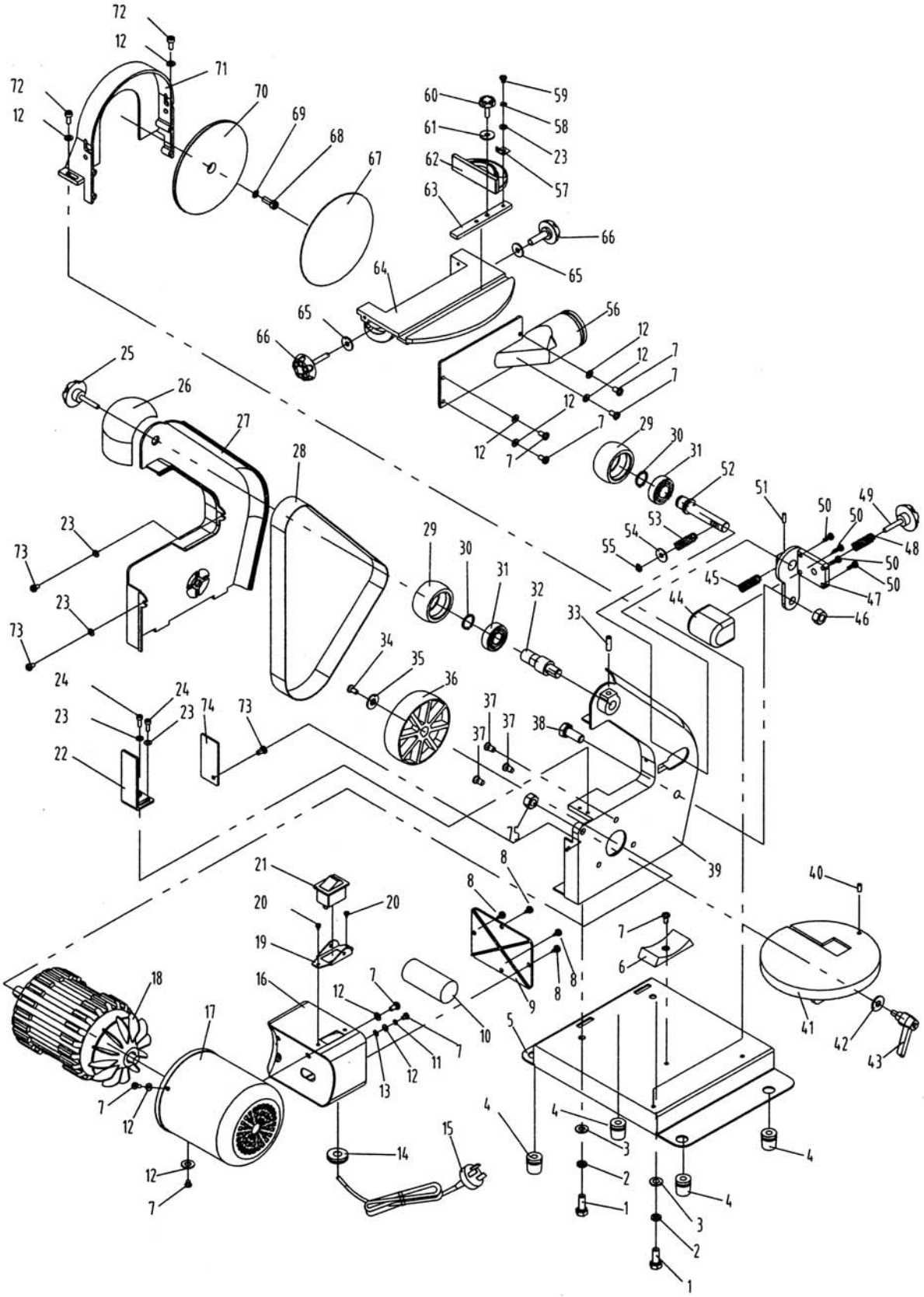

Item Number	Descriptions		QTY	Item Number	Descriptions		QTY
1	Hex Bolt	M8X20	2	38	Hex Bolt	M10X25	1
2	Spring Washer	D8	2	39	Sanding Belt Support		1
3	Flat Washer	D8	2	40	Hex Socket Screw	M6X20	1
4	Rubber Foot		4	41	Belt Sanding Table		1
5	Base		1	42	Large Flat Washer	D8	1
6	Rubber Motor Pad		1	43	Locking Knob Assy		1
7	Philips Screw	M5X10	9	44	Adjusting Shaft Guard		1
8	Philips Screw	ST4.2X9.5	4	45	Adjusting Spring		1
9	Switch Box Cover		1	46	Non-Metal Nut	M10	1
10	Capacitor		1	47	Adjusting Fixing Board		1
11	Spring Washer	D5	1	48	Adjusting Spring		1
12	Flat Washer	D5	10	49	Adjusting Knob		1
13	Star Washer	D5	1	50	Philips Screw	ST4.2X16	4
14	Cord Clip		1	51	Spring Column Pin	3x20	1
15	Cord & Plug		1	52	Adjusting Shaft		1
16	Switch Box		1	53	Adjusting Spring		1
17	Motor safeguard		1	54	Large Flat Washer	D5	1
18	Motor		1	55	C-Clip	3.5	1
19	Switch cover		1	56	Sanding Disc Cover		1
20	Philips Screw	ST2.9X6	2	57	Indication Arrow		1
21	Switch		1	58	Star Washer	D4	1
22	Sanding Belt Board		1	59	Philips Screw	M4X6	1
23	Flat Washer	D4	5	60	Scale Knob		1
24	Hex Socket Screw	M4X10	2	61	Large Flat Washer	D6	1
25	Cover Locking Knob		1	62	Mitre Gauge		1
26	Sanding Belt Safeguard		1	63	Rod		1
27	Sanding Belt Bracket Cover		1	64	Sanding Disc Table		1
28	Sanding Belt	1"x30"	1	65	Flat washer	D6	2
29	Idler Wheel		2	66	Table Locking Knob		2
30	Clip Spring Washer	D15	2	67	Sander Paper Disc	5"	1
31	Bearing	6202	2	68	Hex Socket Screw	M6X16	1
32	Idler Shaft		1	69	Star Washer	D6	1
33	Hex Socket Screw	M6X6	1	70	Sanding Backer Disc		1
34	Philips Screw	M5X16 LEFT	1	71	Sanding Disc Guard		1
35	Special Locking Pad		1	72	Hex Socket Screw	M5X10	2
36	Driven Wheel		1	73	Philips Screw	M4X8	3
37	Philips Screw	M6X12	3	74	Belt Guard Plate		1
				75	Hex Nut	M8	1